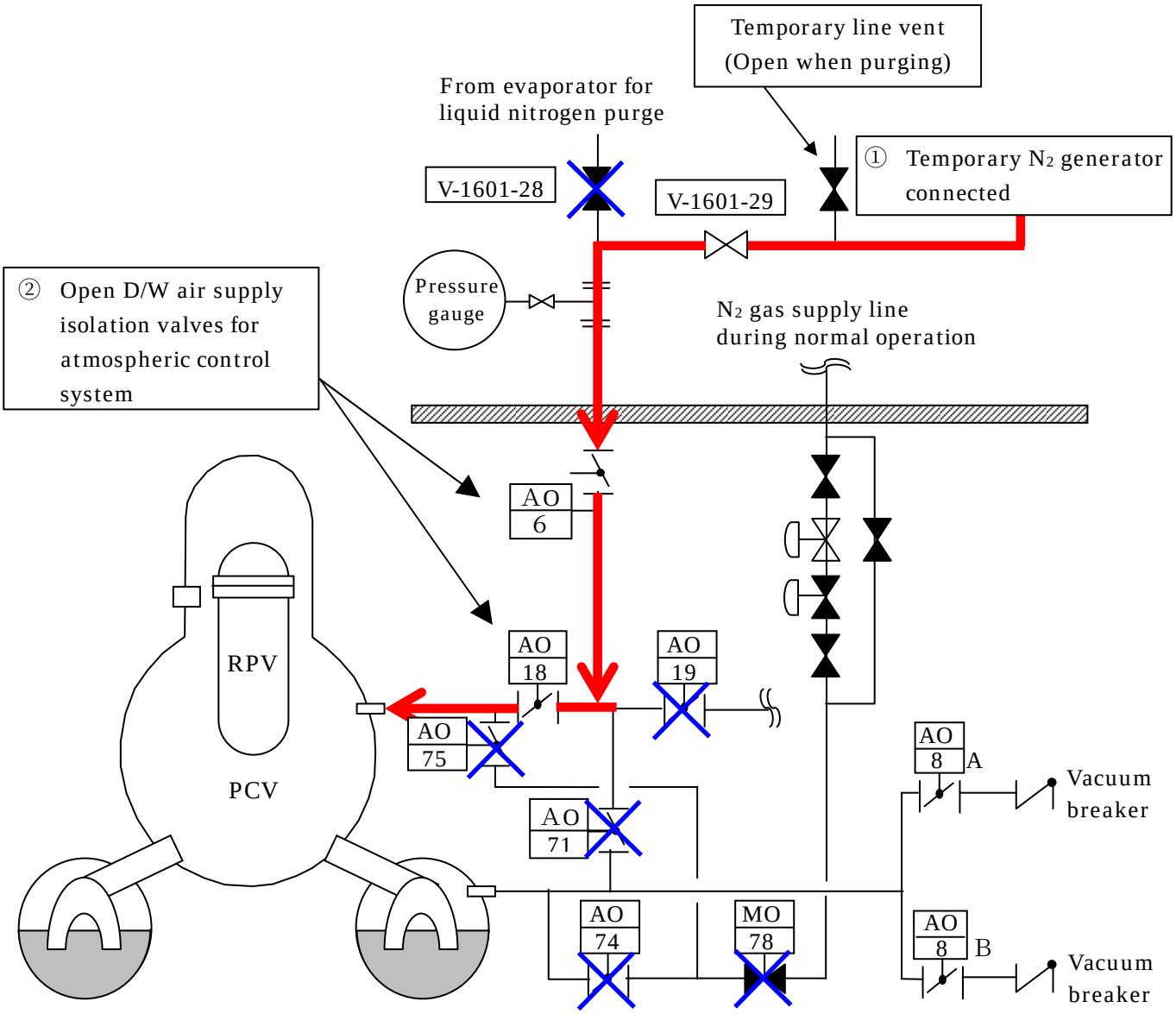

Schematic Diagram

Regarding Injection of Nitrogen Gas into the PCV