(Attachment 2)
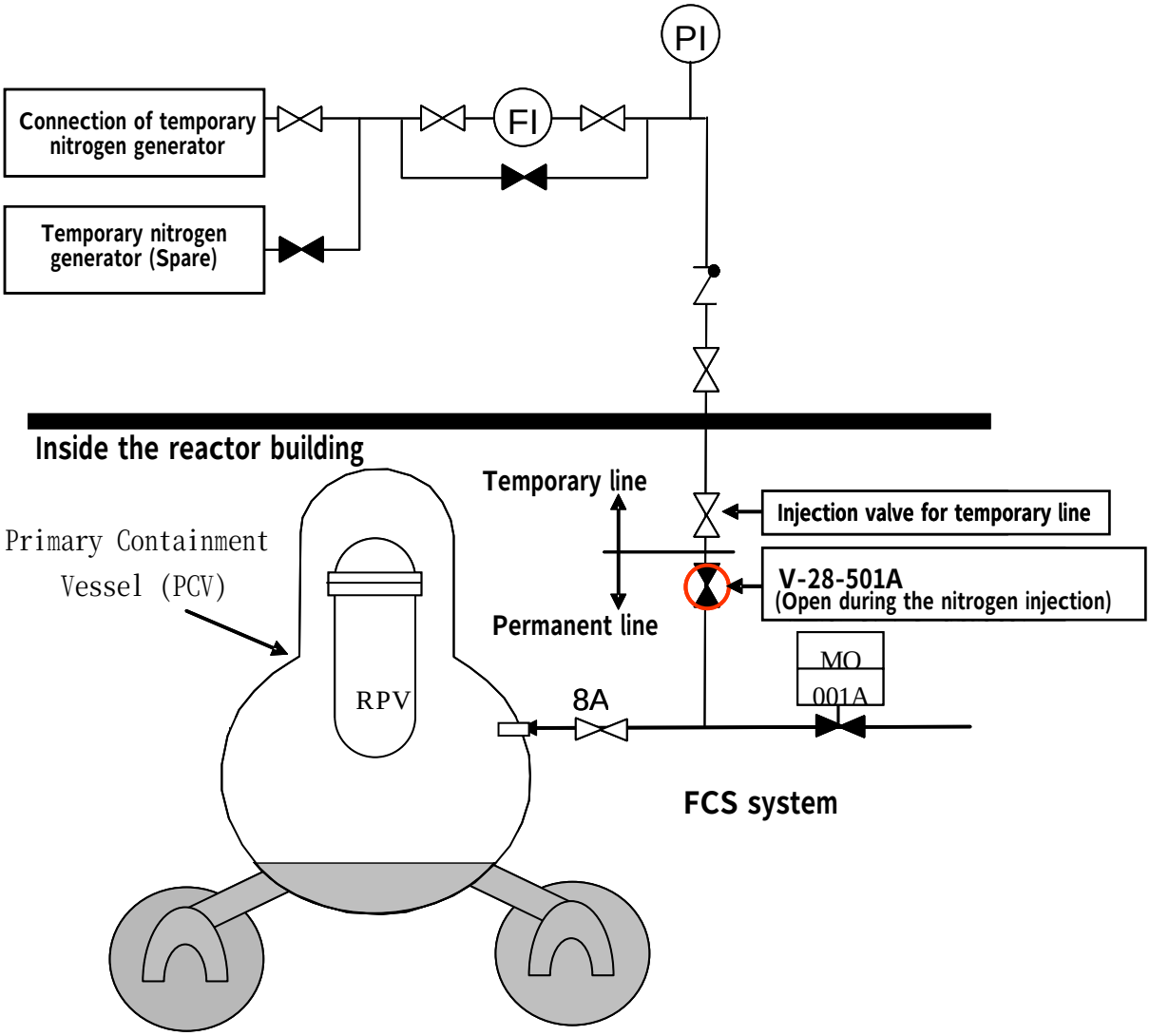
Injection Line to the reactor containment vessel of Unit 2 at Fukushima Daiichi Nuclear Power Station